MEM Bath cascade spout without diverter for deck mounting - Chrome

MEM

13 630 740

- 235mm projection
- cascade
- height of mixer 100 mm
- height up to aerator 80 mm
- hole diameter 32 mm
- 1/2" connection
- max. flow 26.5 l/min at 3 bar flow pressure
- WRAS

Chrome	13 630 740-00
Brushed Platinum	13 630 740-06
Platinum	13 630 740-08
Dark Chrome	13 630 740-19
Brushed Durabrass (23kt Gold)	13 630 740-28
Brushed Champagne (22kt Gold)	13 630 740-46
Champagne (22kt Gold)	13 630 740-47
Brushed Dark Platinum	13 630 740-99

MEM Bath cascade spout without diverter for deck mounting - Chrome

MEM

13 630 740

mm [inches]

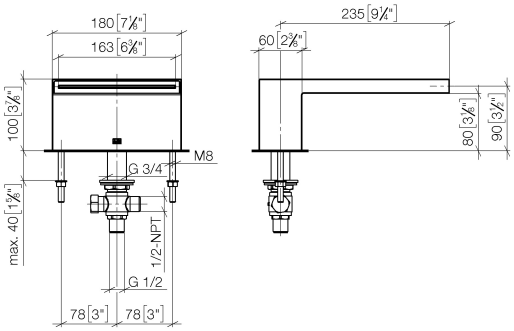

Flow rate chart

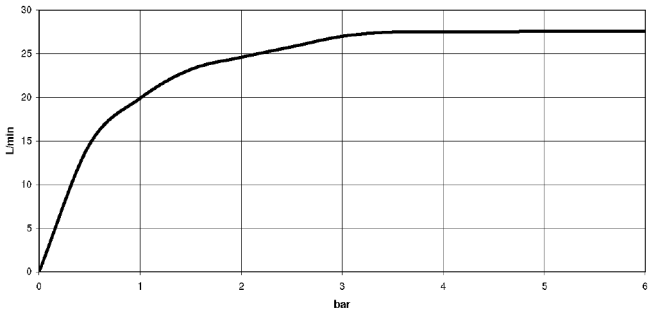

Trajectory diagram

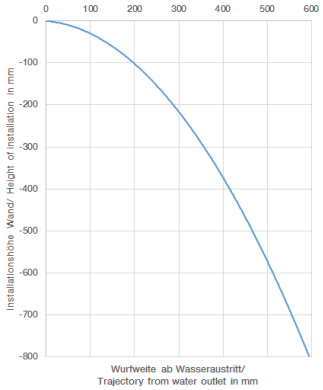

Codes & Standards

ASME A112.18.1	cUPC	DIN 4109	ISO 3822
Scottish Water Byelaws	UK Water Supply Regulations	Ü-Zeichen	

MEM Bath cascade spout without diverter for deck mounting - Chrome

13 630 740

Certificates

IAPMO_4976 LGA_19 WRAS_240502

MEM Bath cascade spout without diverter for deck mounting - Chrome

13 630 740

Parts for other finishes can be found here: Brushed Platinum

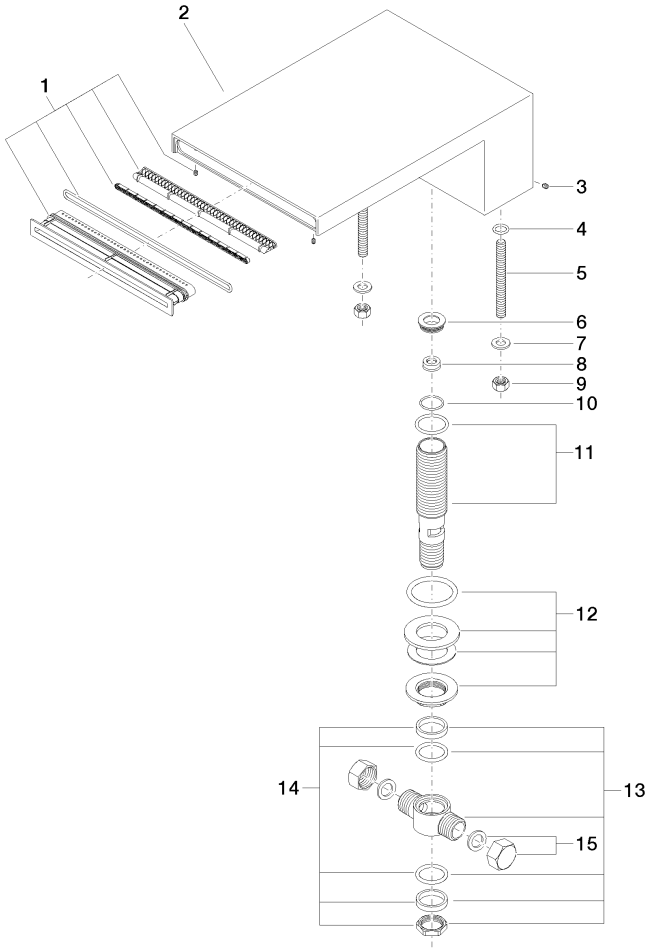

Spare parts list

No.	Item Number	Name	Quantity used	Delivery time
1	90 29 03 059 00 90	insert	1	2
2	09 11 74 040-00	spout	1	10
3	09 31 11 044 90	pin	1	2
4	09 14 10 008 90	seal	2	2
5	09 31 11 011 90	pin	2	2
6	09 24 04 246 20 90	nipple	1	2
7	09 30 11 045 90	disc	2	2
8	09 23 01 057 90	flow reducer	1	2
9	09 23 10 023 90	nut	2	2
10	09 14 10 140 90	seal	1	2
11	90 30 01 033 00 90	base	1	2
12	04 23 10 004 04 90	fixing set	1	2
13	90 17 11 020 10 90	distributor	1	2
14	90 23 10 012 00 90	gasket kit	1	2
15	04 21 02 006 00 92	cap	2	2

We reserve the right to change designs, product range and technical specifications without prior notice.
More information can be found at: www.dornbracht.com +49 (0) 2371 8899 900 mail@dornbracht.com